Master on Logistics and Supply Chain Management

Teacher's conference
Riga, 9 March 2016
RTU

Universitat Autònoma de Barcelona
University of Applied Sciences Wildau
Rīgas Tehniskā Universitāte

Universitat Autònoma de Barcelona

Technische Hochschule Wildau [FH]
Technical University of Applied Sciences
WILDAU

RTU

Agenda

- Module presentations
  - Summary from UAB workshop
  - UAB modules
  - RTU modules (YM, JP, PP, JM, ARo)
  - UASW modules (GN, MM, MS, TM)
  - RTU modules (MU, AR)
- Coffee break 12:30-12:45
- Teaching discussions:
  - Presentation of the competence matrix.
  - Presentation of the new LSCM Study guides website at UAB.
  - Teaching material at nebula. Cohort performance report.
  - Creation of the coordination groups for the dependent modules
  - Unification of optimization software
  - Use of The Fresh Connection game.

UAB modules

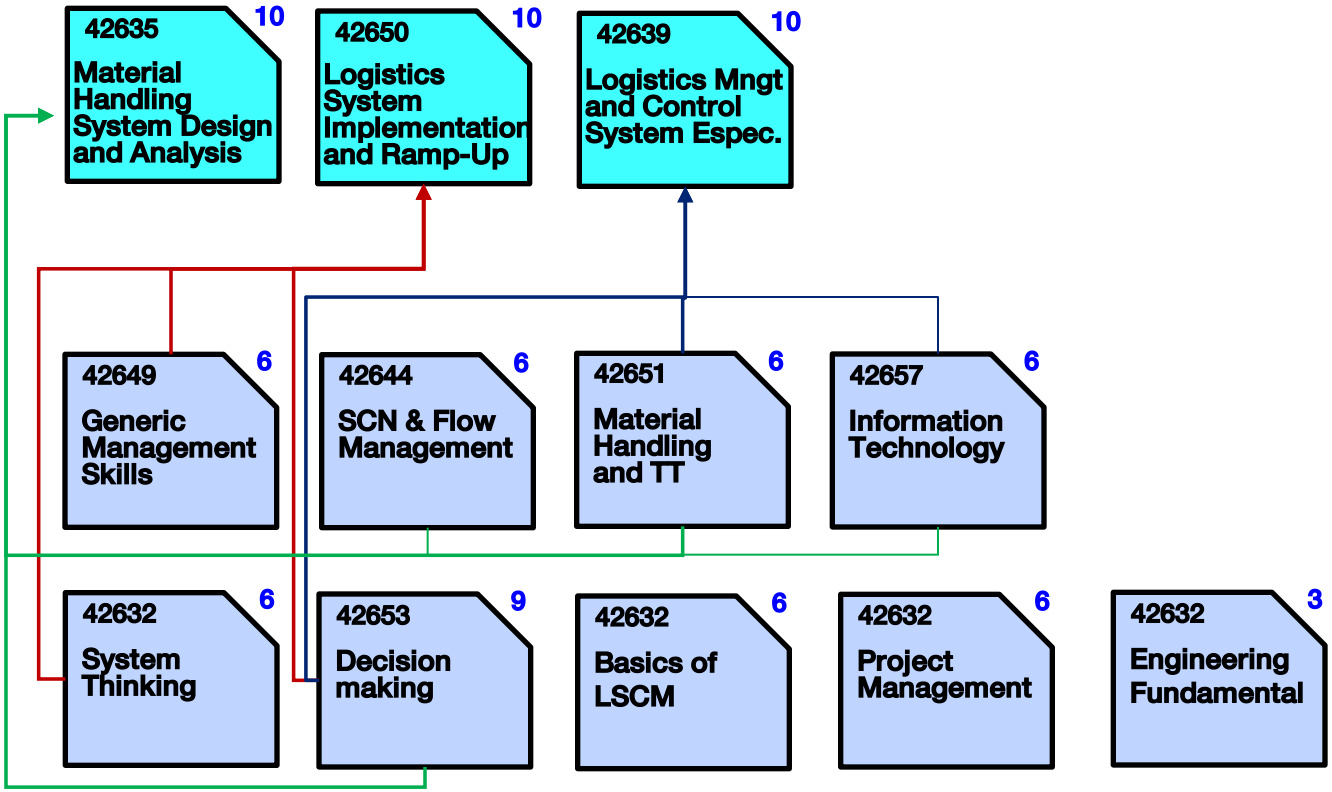
42635
10
Material Handling System Design and Analysis
42650
10
Logistics System Implementation and Ramp-Up
42639
10
Logistics Mngt and Control System Espec.
42649
6
Generic Management Skills
42644
6
SCN & Flow Management
42651
6
Material Handling and TT
42657
6
Information Technology
42632
6
System Thinking
42653
9
Decision making
42632
6
Basics of LSCM
42632
6
Project Management
42632
3
Engineering Fundamental

UAB modules

- Basics of LSCM
  - To provide a practical introduction to the field of Logistics & Supply Chain Management (LSCM).
  - To learn the strategic importance for any firm of good supply chain design, planning, and operation.
  - To analyze how supply chain agents can be used during supply chain design, planning, and operation to improve performance.
  - To provide a basic understanding of analytic methodologies for supply chain analysis.

UAB modules

- System Thinking
  - The main objective of this subject is to introduce a causal approach to develop efficient transparent models enhancing simulation tools with the capability to explore uncertainties, trend breaks, and discontinuities; and extend their potential to foster deliberation; and their relevance to decision makers

UAB modules

- Decision Making
  - recognition and analysis of a decision problem,
  - definition of objectives,
  - forecasting of future developments,
  - identification and evaluation of feasible activities (solutions), and finally selection of good solutions.

UAB modules

- Project Management
  - The objective of the Project Management course is to introduce students to the knowledge, processes, skills, tools and techniques suitable for project management, such that the application of them to satisfy the requirements specified for project development, and may have a significant impact on its success.

UAB modules

- Engineering Foundamentals
  - Understanding of what engineering is and the different aspects on problem solving.
  - Practical problem solving by the application of the appropriate methodology.
  - Learning and practicing of some aspects and methodologies applied to innovation application in problem solving.

LSCM modules: roadmap

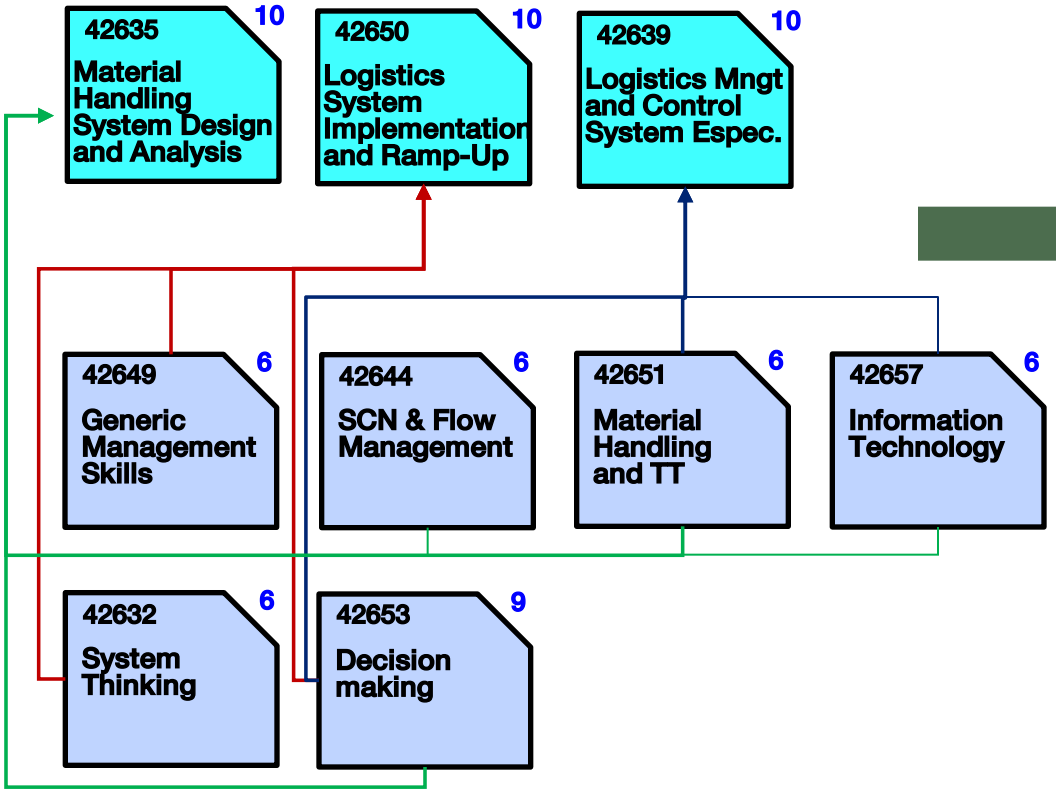

Universitat Autònoma de Barcelona

Technische Hochschule Wildau [FH] Technical University of Applied Sciences

RTU

Agenda

- Module presentations
  - Summary from UAB workshop
  - UAB modules
  - RTU modules (YM, JP, PP, JM, ARo)
  - UASW modules (GN, MM, MS, TM)
  - RTU modules (MU, AR)
- Teaching discussions:
  - Presentation of the competence matrix.
  - Presentation of the new LSCM Study guides website at UAB.
  - Teaching material at nebula. Cohort performance report.
  - Creation of the coordination groups for the dependent modules
  - Unification of optimization software
  - Use of The Fresh Connection game.

Agenda

- Module presentations
  - Summary from UAB workshop
  - UAB modules
  - RTU modules (YM, JP, PP, JM, ARo)
  - UASW modules (GN, MM, MS, TM)
  - RTU modules (MU, AR)
- Teaching discussions:
  - Presentation of the competence matrix.
  - Presentation of the new LSCM Study guides website at UAB.
  - Teaching material at nebula. Cohort performance report.
  - Creation of the coordination groups for the dependent modules
  - Unification of optimization software
  - Use of The Fresh Connection game.

The competence's matrix

- The verification process at UAB implied a 'translation' of the LSCM curriculum design.
- It was not a matter of literal translation but an adaptation to the agency requirements.
- We had to adopt their terminology
- Source was always our design documents
- Now, we are accrediting what it was verified in 2012

The competence's matrix

- SC1. Ability to address LSCM problems in a holistic approach by taking into account general management concepts, human resources, environmental concerns, and quality, technological and economic aspects.
- SC2. Ability to analyse, structure and discuss situations to identify problems in the field of LSCM and evaluate their complexity
- SC3. Ability to select and apply suitable methodologies and strategies to design a solution for an LSCM problem
- SC4. Ability to evaluate different alternatives and select the solution to be implemented.
- SC5. Ability to elaborate solid arguments to convince and motivate decision makers, select the proper LSCM partners and then plan and coordinate the project to implement the solution

The competence's matrix

- SC1. Ability to address LSCM problems in a holistic approach by taking into account general management concepts, human resources, environmental concerns, and quality, technological and economic aspects.

  Address problems of management and coordination of logistics operations in production, transport and services in a holistic approach, by means of the consistent application of the supply chain management concepts and strategies, taking into account the pertinent aspects of environment, human capital, quality, technology, and economics.

- …

The competence's matrix

- SC2. Ability to analyse, structure and discuss situations to identify problems in the field of LSCM and evaluate their complexity

  Analyse, organise and discuss situations in logistics in order to identify and model the dependency relationships, influence and impact that usually occur in the main performance indicators and quality factors as well as evaluating their complexity.

- …

The competence's matrix

	Competences	ES	CAT
E02	Analyse, organise and discuss situations in logistics in order to identify and model the dependency relationships, influence and impact that usually occur in the main performance indicators and quality factors as well as evaluating their complexity.	Analizar, estructurar y discutir situaciones propias de la logística a fin de identificar y modelar las relaciones de dependencia, influencia e impacto habituales en los principales indicadores de rendimiento y factores de calidad así como evaluar su complejidad.	Analitzar, estructurar i discutir situacions pròpies de la logística a fi d'identificar i modelar les relacions de dependència, influència i impacte habituals en els principals indicadors de rendiment i factors de qualitat, i avaluar-ne la complexitat.
E03	Select and apply the most relevant analytical methodologies, strategies and current technologies for designing solutions to the problems of management and coordination of material, information and financial flows.	Seleccionar y aplicar las metodologías analíticas, las estrategias y las tecnologías actuales más relevantes para diseñar soluciones a los problemas de gestión y coordinación de los flujos de materiales, de información y financieros.	Seleccionar i aplicar les metodologies analítiques, les estratègies i les tecnologies actuals més rellevants per dissenyar solucions per als problemes de gestió i coordinació dels fluxos de materials, d'informació i financers.
E04	Apply quantitative methods and techniques based on optimisation and/or simulation models in order to evaluate the different alternatives and select the most promising solution to be implemented	Aplicar técnicas cuantitativas basadas en modelos de optimización y/o simulación para evaluar las diferentes alternativas y seleccionar la solución más prometedora a implementar.	Aplicar tècniques quantitatives basades en models d'optimització i/o simulació per avaluar les diferents alternatives i seleccionar la solució més prometedora que es pot implementar.
E05	Elaborate solid arguments based on quantitative models and analytical methods in order to convince and motivate decision makers, determine the adequate LCSM partners and then plan and coordinate the project to implement the solution.	Elaborar argumentos sólidos, apoyados en modelos cuantitativos y métodos analíticos, para convencer y motivar a los responsables de los procesos de toma de decisiones, seleccionar los socios en la cadena de suministro adecuados, y planificar y coordinar el proyecto para implementar la solución.	Elaborar arguments sòlids, basats en models quantitatius i mètodes analítics, per convèncer i motivar els responsables dels processos de presa de decisions, seleccionar els socis adequats en la cadena de subministrament, i planificar i coordinar el projecte per implementar la solució.
T01	Demonstrate abilities in oral and written communication both in the student's native language and in English. Demonstrate synthesis skills and ability in presentation techniques.	Habilidad para la comunicación oral y escrita en el lenguaje nativo del estudiante y en inglés. Capacidad de síntesis y técnicas de presentación.	Tenir habilitats per a la comunicació oral i escrita en la llengua pròpia i en anglès. Capacitat de síntesi i tècniques de presentació.
T02	Demonstrate information management skills: ability to retrieve and analyse information from different sources.	Capacidad en la gestión de información: habilidad para extraer y analizar información de diferentes fuentes.	Ser capaç de gestionar informació: Extreure i analitzar informació de diferents fonts.
T03	Demonstrate abilities to document and reflect the problem-solving process in order to extract the lessons learned.	Habilidad para documentar y reflejar el proceso de resolución del problema a fin de extraer las lecciones aprendidas.	Documentar i reflectir el procés de resolució del problema a fi d'extreure'n les lliçons apreses.
T04	Apply a rigorous and efficient approach to problem solving.	Capacidad para aplicar un enfoque riguroso y eficiente a la solución de problemas.	Ser capaç d'aplicar un enfocament rigorós i eficient a la resolució de problemes.
T05	Face a new problem under a scientific perspective.	Capacidad para afrontar un problema nuevo desde una perspectiva científica.	Ser capaç d'afrontar un problema nou des d'una perspectiva científica.
T06	Identify the main aspects to be planned in the resolution of a logistic project, specifying the project boundaries, and leading with a solution	Identificar el principal aspecto a planificar en la resolución de un problema, especificando los límites del proyecto, y proponiendo una solución.	Identificar el principal aspecte que s'ha de planificar en la resolució d'un problema, especificar els límits del projecte i proposar-hi una solució.
T07	Work collaboratively in a group.	Trabajar de manera colaborativa en grupo.	Treballar de manera col·laborativa en grup.
B06	Possess and understand knowledge that provides a basis or opportunity for originality in the development and/or application of ideas, often in a research context	Poseer y comprender conocimientos que aporten una base u oportunidad de ser originales en el desarrollo y/o aplicación de ideas, a menudo en un contexto de investigación.	Tenir coneixements que aportin la base o l'oportunitat de ser originals en el desenvolupament o l'aplicació d'idees, sovint en un context de recerca.
B07	Students should know how to apply the knowledge they acquire and be capable of solving problems in new or little-known areas within broader contexts (or multidisciplinary contexts) related to their area of study	Que los estudiantes sepan aplicar los conocimientos adquiridos y su capacidad de resolución de problemas en entornos nuevos o poco conocidos dentro de contextos más amplios (o multidisciplinares) relacionados con su área de estudio.	Que els estudiants sàpiguen aplicar els coneixements adquirits i la seva capacitat de resolució de problemes en entorns nous o poc coneguts dins de contextos més amplis (o multidisciplinaris) relacionats amb la seva àrea d'estudi.
B08	Students should be able to integrate knowledge and face the complexity of making judgements from information which, being incomplete or limited, include reflections on the social and ethical responsibilities linked to the application of their knowledge and judgements	Que los estudiantes sean capaces de integrar conocimientos y enfrentarse a la complejidad de formular juicios a partir de una información que, siendo incompleta o limitada, incluya reflexiones sobre las responsabilidades sociales y éticas vinculadas a la aplicación de sus conocimientos y juicios.	Que els estudiants siguin capaços d'integrar coneixements i enfrontar-se a la complexitat de formular judicis a partir d'una informació que, tot i ser incompleta o limitada, inclogui reflexions sobre les responsabilitats socials i ètiques vinculades a l'aplicació dels seus coneixements i judicis.
B09	Students should know how to communicate their conclusions, knowledge and final reasoning that they hold in front of specialist and non-specialist audiences clearly and unambiguously	Que los estudiantes sean capaces de integrar conocimientos y enfrentarse a la complejidad de formular juicios a partir de una información que, siendo incompleta o limitada, incluya reflexiones sobre las responsabilidades sociales y éticas vinculadas a la aplicación de sus conocimientos y juicios.	Que els estudiants sàpiguen comunicar les seves conclusions, així com els coneixements i les raons últimes que les fonamenten, a públics especialitzats i no especialitzats d'una manera clara i sense ambigüitats.
B10	Student should possess an ability to learn that enables them to continue studying in a manner which is largely self-supervised or independent	Que los estudiantes posean las habilidades de aprendizaje que les permitan continuar estudiando de un modo que habrá de ser en gran medida autodirigido o autónomo.	Que els estudiants tinguin les habilitats d'aprenentatge que els permetin continuar estudiant, en gran manera, amb treball autònom a autodirigit.

Go to the competence file

Learning outcome deployment

Competence	LO	CAT	EN
E01	E01.01	Conèixer la te	Know general LCSM terminology.
	E01.02	Comprendr	Understand general LCSM concepts and strategies.
	E01.03	Comprendr	Understand the general LCSM framework
	E01.04	Entendre la	Understand LCSM as an area.
	E01.05	Compren	Understand LSCM systems as complex structures
	E01.06	Comprendr	Undersantd the part in relation to the whole.
	E01.07	Comprendr	Understand how to model the system and the decision-making process
	E01.08	Compren ns.	Understand the main methods and techniques supporting decision making
	E01.09	Conèixer conceptes generals de l'economia i l	Know the general concepts of economics and business.
	E01.10	Conèixer la terminologia i els conceptes clau en l'àrea de g projectes.	Undertand the key concepts and terminology in project management areas.
	E01.11	Identificar els agents econòmics que configuren una economia.	Identify the economic agents configuring an economy.
	E01.12	Entendre les forces que governen l'oferta i la demanda	Understand the forces that rule supply and demand
	E01.13	Identificar els models d'empresa, tant des de la perspectiva de la propietat com de l'organització interna.	Identify business models from the perspective of ownership as well as from the internal organisation.
	E01.14	Comprendre els principis, els conceptes i les tècniques de les tecnologies de la informació.	Understand the principles, concepts and techniques of information technology.
	E01.15	Conèixer conceptes generals dels sistemes de gestió de la informació.	Understand general concepts of the information management systems.
	E01.16	Conèixer les tecnologies típiques de maneig de materials utilitzades en logística.	Understand the typical materials handling techniques in logistics.
	E01.17	Comprendre els principis de treball, els modes d'operació, les restriccions d'aplicació i les oportunitats d'automatització de les tecnologies de maneig de materials i transport.	Understand the working principles, operational modes, application constraints and automation opportunities in material handling and transport.
	E01.18	Abordar problemes de LSCM mitjançant un enfocament holístic, tenint en compte aspecte tecnològics, com ara la idoneïtat i el rendiment de les tecnologies de maneig de materials utilitzades.	Address LSCM problems by using a holistic approach, taking into account technological aspects, such as the suitability and performance of technologies in material handling being used.
	E01.19	Conèixer la terminologia de la LSCM específica.	Know the specific LSCM terminology.
	E01.20	Conèixer la terminologia i els conceptes clau en les àrees generals de gestió.	Know the key concepts and terminology in related management areas.
	E01.21	Abordar problemes de disseny en MHS mitjançant un enfocament holístic.	Address MHS design problems from a holistic approach.
	E01.22	Abordar problemes de disseny de sistemes de transport mitjançant un enfocament holístic	Address transport system design problems from a holistic approach
	E01.23	Abordar problemes de disseny de sistemes LMC mitjançant un enfocament holístic.	Address design problems in Logistics Management and Control from a holistic approach.
	E01.24	Abordar problemes d'implementació i llançament de sistemes logístics mitjançant un enfocament holístic.	Address the implementation and ramp-up problems in logistic systems from a holistic approach.
	E01.25	Identificar i abordar problemes i opcions en la planificació i la gestió de sistemes logístics mitjançant un enfocament holístic: Descriure sistemes logístics mitjançant enfocaments estructurats d'anàlisi i disseny i avaluar-ne la complexitat i els efectes en rendiment i cost.	Identify and deal with problems and options in the planning and management of logistic systems from a holistic approach: 1) Describe logistic systems through structured design and analysis approaches. 2) Evaluate their complexity and effects in terms of performance and cost.
	E01.26	Identificar i abordar problemes i opcions en la planificació i la gestió de processos logístics mitjançant un enfocament holístic i avaluar-ne la complexitat: Descriure processos logístic identificar connexions entre aquests processos i planificar i implementar processos.	Identify and tackle problems and options in the planning and management of logistical processes using a holistic approach and evaluate its complexity: 1) Describe logistical processes. 2) Identify connections between processes. 3) Plan and Implement the processes.
	E01.27	Identificar i abordar problemes i opcions en la planificació i la gestió de fluxos d'informació logística mitjançant un enfocament holístic: descriure i avaluar els fluxos d'informació logística i planificar i implementar fluxos d'informació logística.	Identify and deal with problems and options in the planning and management of logistic information flows from a holistic focus: 1) Describe and evaluate the flows of logistic information. 2) Plan and implement flows of logistic information.
	E01.28	Identificar i abordar problemes i opcions en la planificació i la gestió de projectes d'enginyeria logística mitjançant un enfocament holístic: Definir els requisits d'un projecte d'enginyeria logística i identificar connexions entre projectes.	Identify and deal with problems and options in the planning and management of logistical engineering projects from a holistic approach: 1) Define the requirements of a logistic engineering project. 2) Identify connections between projects.

The writing was made on the basis of the learning outcomes from our module descriptions

Go to the competence file

Module competences and learning outcomes

ADD	The Learning Outcome was defined but NOT assigned to de module: Assign it keeping existing code
DELETE	The Learning Outcome DOES NOT correspond to the module: Delete assignment
NEW	The Learning Outcome WAS NOT defined NOR assigned to the module: Create LO using the proposed
CHANGE	The assigned Learning Outcome DOES NOT correspond to the module: Reassign with the proposed LO

Action	Subject	Assignatura			Competence	Competencia	Code	Learning Outcome	R. Aprendizaje
	Basics of Logistics and Supply Chain Management	Fonaments de Logística i Gestió de Cadenes de Subministrament	B06	B	Possess and understand knowledge that provides a basis or opportunity for originality in the development and/or application of ideas, often in a research context	Poseer y comprender conocimientos que aporten una base u oportunidad de ser originales en el desarrollo y/o aplicación de ideas, a menudo en un contexto de investigación.	B06.00	Possess and understand knowledge that provides a basis or opportunity for originality in the development and/or application of ideas, often in a research context	Poseer y comprender conocimientos que aporten una base u oportunidad de ser originales en el desarrollo y/o aplicación de ideas, a menudo en un contexto de investigación.
	Basics of Logistics and Supply Chain Management	Fonaments de Logística i Gestió de Cadenes de Subministrament	B10	B	Student should possess an ability to learn that enables them to continue studying in a manner which is largely self-supervised or independent	Que los estudiantes posean las habilidades de aprendizaje que les permitan continuar estudiando de un modo que habrá de ser en gran medida autodirigido o autónomo.	B10.00	Student should possess an ability to learn that enables them to continue studying in a manner which is largely self-supervised or independent	Que los estudiantes posean las habilidades de aprendizaje que les permitan continuar estudiando de un modo que habrá de ser en gran medida autodirigido o autónomo.
	Basics of Logistics and Supply Chain Management	Fonaments de Logística i Gestió de Cadenes de Subministrament	E01	E	Address problems of management and coordination of logistics operations in production, transport and services in a holistic approach, by means of the consistent application of the supply chain management concepts and strategies, taking into account the pertinent aspects of environment, human capital, quality, technology, and economics.	Abordar problemas de gestión y coordinación de operaciones logísticas de producción, transporte y servicios mediante un enfoque holístico, aplicando de manera consistente e integrada los conceptos y estrategias generales de gestión de la cadena de suministro, las pertinentes consideraciones ambientales, y los aspectos de calidad, tecnológicos y económicos.	E01.01	Know general LCSM terminology.	Conocer la terminología LSCM general.
	Basics of Logistics and Supply Chain Management	Fonaments de Logística i Gestió de Cadenes de Subministrament	E01	E	Address problems of management and coordination of logistics operations in production, transport and services in a holistic approach, by means of the consistent application of the supply chain management concepts and strategies, taking into account the pertinent aspects of environment, human capital, quality, technology, and economics.	Abordar problemas de gestión y coordinación de operaciones logísticas de producción, transporte y servicios mediante un enfoque holístico, aplicando de manera consistente e integrada los conceptos y estrategias generales de gestión de la cadena de suministro, las pertinentes consideraciones ambientales, y los aspectos de calidad, tecnológicos y económicos.	E01.02	Understand general LSCM concepts and strategies.	Comprender conceptos y estrategias LSCM generales.
	Basics of Logistics and Supply Chain Management	Fonaments de Logística i Gestió de Cadenes de Subministrament	E01	E	Address problems of management and coordination of logistics operations in production, transport and services in a holistic approach, by means of the consistent application of the supply chain management concepts and strategies, taking into account the pertinent aspects of environment, human capital, quality, technology, and economics.	Abordar problemas de gestión y coordinación de operaciones logísticas de producción, transporte y servicios mediante un enfoque holístico, aplicando de manera consistente e integrada los conceptos y estrategias generales de gestión de la cadena de suministro, las pertinentes consideraciones ambientales, y los aspectos de calidad, tecnológicos y económicos.	E01.03	Understand the general LSCM framework	Comprender el marco LSCM general.
	Basics of Logistics and Supply Chain Management	Fonaments de Logística i Gestió de Cadenes de Subministrament	E01	E	Address problems of management and coordination of logistics operations in production, transport and services in a holistic approach, by means of the consistent application of the supply chain management concepts and strategies, taking into account the pertinent aspects of environment, human capital, quality, technology, and economics.	Abordar problemas de gestión y coordinación de operaciones logísticas de producción, transporte y servicios mediante un enfoque holístico, aplicando de manera consistente e integrada los conceptos y estrategias generales de gestión de la cadena de suministro, las pertinentes consideraciones ambientales, y los aspectos de calidad, tecnológicos y económicos.	E01.04	Understand LCSM as an area.	Entender LSCM como un área.
	Basics of Logistics and Supply Chain Management	Fonaments de Logística i Gestió de Cadenes de Subministrament	E02	E	Analyse, organise and discuss situations in logistics in order to identify and model the dependency relationships, influence and impact that usually occur in the main performance indicators and quality factors as well as evaluating their complexity.	Analizar, estructurar y discutir situaciones propias de la logística a fin de identificar y modelar las relaciones de dependencia, influencia e impacto habituales en los principales indicadores de rendimiento y factores de calidad así como evaluar su complejidad.	E02.01	Know problems particular to the field of LSCM.	Conocer problemas propios del campo LSCM.
	Basics of Logistics and Supply Chain Management	Fonaments de Logística i Gestió de Cadenes de Subministrament	E02	E	Analyse, organise and discuss situations in logistics in order to identify and model the dependency relationships, influence and impact that usually occur in the main performance indicators and quality factors as well as evaluating their complexity.	Analizar, estructurar y discutir situaciones propias de la logística a fin de identificar y modelar las relaciones de dependencia, influencia e impacto habituales en los principales indicadores de rendimiento y factores de calidad así como evaluar su complejidad.	E02.02	Analyze and discuss cases, problems and issues regarding the requirements and logistics options.	Analizar y discutir casos, problemas y situaciones con respecto a los requerimientos y opciones de la logística.
	Basics of Logistics and Supply Chain Management	Fonaments de Logística i Gestió de Cadenes de Subministrament	E02	E	Analyse, organise and discuss situations in logistics in order to identify and model the dependency relationships, influence and impact that usually occur in the main performance indicators and quality factors as well as evaluating their complexity.	Analizar, estructurar y discutir situaciones propias de la logística a fin de identificar y modelar las relaciones de dependencia, influencia e impacto habituales en los principales indicadores de rendimiento y factores de calidad así como evaluar su complejidad.	E02.03	Assess the impact of logistics and SCM activities.	Evaluar el impacto de la logística y las actividades SCM.

Go to the competence file

The competence's matrix

Master LSCM (UAB/RTU/UASW)

E: Specific competence (Skills)
E.XX: Learning outcomes
T: Transverse competence
B: Basic Competence

Competències i Resultats d'aprenentatge		M1.1 Basics of logistics and supply chain management (6 ECTS)	M1.2 System Thinking (6 ECTS)	M1.3 Decision Making (9 ECTS)	M1.4 Project Management (3 ECTS)	M1.5 Engineering Fundamentals (6 ECTS)	M1.6 Economics Fundamentals (6 ECTS)	M1.7 Information Technologies (6 ECTS)	M1.8 Material Handling & Transport Technologies (6 ECTS)	M1.9 Supply Chain Network & Flow Management (9 ECTS)	M1.10 Generic Management Skills (6 ECTS)	M1.11 LSCM European Dimension (3 ECTS)	UASW.1 Material Handling System Design and Analysis (10 ECTS)
E01	Address problems of management and coordination of logistics operations in production, transport and services in a holistic approach, by means of the consistent application of the supply chain management concepts and strategies, taking into account the pertinent aspects of environment, human capital, quality, technology, and economics.	x	x	x	x		x	x	x	x	x		x
E01.01	Know general LCSM terminology.	x											
E01.02	Understand general LSCM concepts and strategies.	x			x		x						
E01.03	Understand the general LSCM framework	x											
E01.04	Understand LCSM as an area.	x											
E01.05	Understand LSCM systems as complex structures		x										
E01.06	Undersamtd the part in relation to the whole.		x										
E01.07	Understand how to model the system and the decision-making process			x									
E01.08	Understand the main methods and techniques supporting decision making			x									
E01.09	Know the general concepts of economics and business.						x						
E01.10	Undertand the key concepts and terminology in project management areas.				x								
E01.11	Identify the economic agents configuring an economy.						x						
E01.12	Understand the forces that rule supply and demand						x						
E01.13	Identify business models from the perspective of ownership as well as from the internal organisation.						x						
E01.14	Understand the principles, concepts and techniques of information technology.							x					
E01.15	Understand general concepts of the information management systems.							x					
E01.16	Understand the typical materials handling techniques in logistics.								x				
E01.17	Understand the working principles, operational modes, application constraints and automation opportunities in material handling and transport.								x				
E01.18	Address LSCM problems by using a holistic approach, taking into account technological aspects, such as the suitability and performance of technologies in material handling being used.								x				
E01.19	Know the specific LSCM terminology.									x			
E01.20	Know the key concepts and terminology in related management areas.										x		
E01.21	Address MHS design problems from a holistic approach.												x
E01.22	Address transport system design problems from a holistic approach												
E01.23	Address design problems in Logistics Management and Control from a holistic approach.												
E01.24	Address the implementation and ramp-up problems in logistic systems from a holistic approach.												
E01.25	Identify and deal with problems and options in the planning and management of logistic systems from a holistic approach: 1) Describe logistic systems through structured design and analysis approaches. 2) Evaluate their complexity and effects in terms of performance and cost.												
E01.26	Identify and tackle problems and options in the planning and management of logistical processes using a holistic approach and evaluate its complexity: 1) Describe logistical processes. 2) Identify connections between processes. 3)												

Go to the competence matrix

Universitat Autònoma de Barcelona

Technische Hochschule Wildau [FH] Technical University of Applied Sciences

RTU

Module descriptions

Master LSCM (UAB/RTU/UASW)																
System Thinking (6 ECTS)			Learning Outcomes													
Learning activities		ECTS	E01.05 (12)	E01.06 (11)	E02.09 (7)	E02.10 (3)	E02.11 (1)	E03.02 (8)	E03.03 (13)	E03.04 (2)	E05.01 (6)	E05.02 (15)	B07 (10)	B08 (9)	T01 (4)	T02 (5)	T07 (14)
Directed	Problem Sessions	0,4															
	Theory Lectures	0,8															
Supervised	Practise Sessions	0,6															
Autonomous	Modeling	2,8															
	Personal Study	1,36															
Evaluation activities		Weighting															
Petri Net Exercises		0,15															
Simulation Models		0,3															
State Space analysis. Oral Presentation		0,55															

	Low intensity (<20%)
	Moderate intensity (20%-60%)
	High intensity (>60)

Go to the module-competence table

Module descriptions: a bad case

Grau en Gestió Aeronàutica (UAB)																
XXXXXXXXXX			Resultats d'aprenentatge													
Activitats formatives		ECTS	CE01.01 (10)	CE01.02 (9)	CE01.03 (2)	CE01.04 (12)	CE01.05 (13)	T01.01 (8)	T01.02 (6)	T01.03 (4)	T01.04 (3)	T2.01 (14)	T2.02 (5)	T2.03 (11)	T2.08 (1)	T06.02 (7)
Dirigides	Classes teoria	1,8														
	Pràctiques en aula (problemes)	0,96														
	Pràctiques en aula (resolució problemes)	2,56														
	Seminaris	0,24														
Autònomes	Estudi autònom	1,96														
	Preparació de proves	0,84														
Sistemes d'avaluació		Ponderació														
Proves parcials		0,8														
Resolució problemes		0,20														

Module descriptions

Agreements

- UAB is finalizing the competence matrix and the corresponding module tables.
- When ready, the responsible for each module will think over the competence/learning outcomes structure and will propose actions if required

Course unit template

GENERAL INFORMATION OF THE MODULE			
Module Title			
Module Code			
Type of Module	Compulsory/Elective		
Level of Module	Master		
Year of study			
Semester			
ECTS			
Prerequisites			
Language of Instruction			
Module Coordinator			
Lecturing Team	Teacher	E-mail	Office

OBJECTIVES OF THE MODULE	
Learning Outcomes	
Competences to be adquired	

MODULE CONTENTS

TEACHING METHODS

ASSESSMENT METHODS

RECOMMENDED READINGS

COURSE UNIT GUIDE			
Course Unit Title			
Type of course	Compulsory/Elective		
ECTS			
Prerequisites			
Lecturing Team	Teacher	E-mail	Office

OBJECTIVES OF THE COURSE UNIT	
Learning Outcomes	

COURSEWORK			
Learning activities	*ECTS(%)*	*Teaching & Learning Methods*	*Competences*
Contact Activity			
Supervised Activity			
Autonomous Activity (self-learning)			

ASSESSMENT		
Assessment Method	*Weight (%)*	*Description*

SHORT DESCRIPTION OF THE COURSE UNIT CONTENT

ADDITIONAL COMMENTS

UAB Universitat Autònoma de Barcelona

Technische Hochschule Wildau [FH] Technical University of Applied Sciences

RTU

lscm

Study guide

Systems Thinking **2015/2016**

Code: 42632
ECTS Credits: 6

Degree	Type	Year	Semester
4313489 Logistics and Supply Chain Management	OB	1	1

Contact

Name: Miquel Àngel Piera Eroles
Email: MiquelAngel.Piera@uab.cat

Use of languages

Principal working language: english (eng)

Teachers

Roman Buil Gine

Prerequisites

None

Objectives and Contextualisation

Objectives and Contextualisation

It is well accepted that a supply chain (SC) is a complex system due to the difficulty to understand the underlying dynamics and its interdependencies, which can drastically affect its behaviour, and in consequence generates uncertainty to properly coordinate the different operations.

A comprehensive systems approach is a requirement for a better understanding of the different emergent dynamics which usually appears in systems characterized by a large amount of components with tight interdependencies. Quantitative models are frequently proposed for forecasting purposes, however, they lack of supporting tools for a better understanding of the system dynamics, which sometimes requires an interdisciplinary approach to consider also the human factor.

The main objective of this subject is to introduce a causal approach to develop efficient transparent models enhancing simulation tools with the capability to explore uncertainties, trend breaks, and discontinuities; and extend their potential to foster deliberation; and their relevance to decision makers. For this purpose, students will be trained with the use of Coloured Petri Net formalism to represent the cause-effect relationships that underlies in most SC systems, and the analysis of the state space for a better understanding of the so called emergent dynamics.

The set of sub-objectives of this subject are:

- Introduce a holistic analysis approach, as opposed to reductionist, as a set of diverse interacting agents within an environment.
- Recognize that the relationships or interactions between elements are more important than the elements themselves in determining the behaviour of the system.
- Recognize a hierarchy of levels of systems and the consequent ideas of properties emerging at strategic, tactic and operational levels, and mutual causality both within and between levels.
- Introduce influence variables for a better understanding of human behaviour in a supply chain system.

Skills

- Address problems of management and coordination of logistics operations in production, transport and services in a holistic approach, by means of the consistent application of the supply chain management concepts and strategies, taking into account the pertinent aspects of environment, human capital, quality, technology, and economics.
- Analyse, organise and discuss situations in logistics in order to identify and model the dependency relationships, influence and impact that usually occur in the main performance indicators and quality factors as well as evaluating their complexity.
- Demonstrate abilities in oral and written communication both in the student's native language and in English. Demonstrate synthesis skills and ability in presentation techniques.
- Demonstrate information management skills: ability to retrieve and analyse information from different sources.
- Elaborate solid arguments based on quantitative models and analytical methods in order to convince and motivate decision makers, determine the adequate LCSM partners and then plan and coordinate the project to implement the solution.
- Select and apply the most relevant analytical methodologies, strategies and current technologies for designing solutions to the problems of management and coordination of material, information and financial flows.
- Students should be able to integrate knowledge and face the complexity of making judgements from information which, being incomplete or limited, include reflections on the social and ethical responsibilities linked to the application of their knowledge and judgements
- Students should know how to apply the knowledge they acquire and be capable of solving problems in new or little-known areas within broader contexts (or multidisciplinary contexts) related to their area of study
- Work collaboratively in a group.

Learning outcomes

1. Analyse complex systems with regard to their performance and sensitivity
2. Apply methods and principles of analysis, evaluation and design of LSCM systems.
3. Characterize emergent properties
4. Demonstrate abilities in oral and written communication both in the student's native language and in English. Demonstrate synthesis skills and ability in presentation techniques.
5. Demonstrate information management skills: ability to retrieve and analyse information from different sources.
6. Identify and design key performance indicators
7. Identify and model dependencies, influences and impact relationships between components of a system
8. Know methods of systems analysis.
9. Students should be able to integrate knowledge and face the complexity of making judgements from information which, being incomplete or limited, include reflections on the social and ethical responsibilities linked to the application of their knowledge and judgements
10. Students should know how to apply the knowledge they acquire and be capable of solving problems in new or little-known areas within broader contexts (or multidisciplinary contexts) related to their area of study
11. Understand the part in the relation to the whole.
12. Understand LSCM systems as complex structures
13. Understand the principles of systems engineering.
14. Work collaboratively in a group.
15. Work out arguments based on models and quantitative techniques

Content

THEORY

ST.T.1: Introduction to Complexity

PROVISIONAL

Go to the website

Discussion

Agreements

- Course Unit is deprecated.
- Study guides become the main document to explain curriculum (students, faculty, accreditation, EM, …):
  - a more detailed description is elaborated (regarding content and relationship to competences, …)
  - they are common to all partners
  - it legally binds the course development
  - UAB will open to all professors the study guide application
  - Typical period for upgrading the guides goes from May to August
- Any required change on competences has to be communicated before this period and approved by the academic committee.

Agenda

- Module presentations
  - Summary from UAB workshop
  - UAB modules
  - RTU modules (YM, JP, PP, JM, ARo)
  - UASW modules (GN, MM, MS, TM)
  - RTU modules (MU, AR)
- Teaching discussions:
  - Presentation of the competence matrix.
  - Presentation of the new LSCM Study guides website at UAB.
  - Teaching material at nebula. Cohort performance report.
  - Creation of the coordination groups for the dependent modules
  - Unification of optimization software
  - Use of The Fresh Connection game.

Discussion

Agreements

- Professors keep teaching material in nebula up to date
- The professor writes the result report upon semester end

Agenda

- Module presentations
  - Summary from UAB workshop
  - UAB modules
  - RTU modules (YM, JP, PP, JM, ARo)
  - UASW modules (GN, MM, MS, TM)
  - RTU modules (MU, AR)
- Teaching discussions:
  - Presentation of the competence matrix.
  - Presentation of the new LSCM Study guides website at UAB.
  - Teaching material at nebula. Cohort performance report.
  - Creation of the coordination groups for the dependent modules
  - Unification of optimization software
  - Use of The Fresh Connection game.

LSCM Roadmap

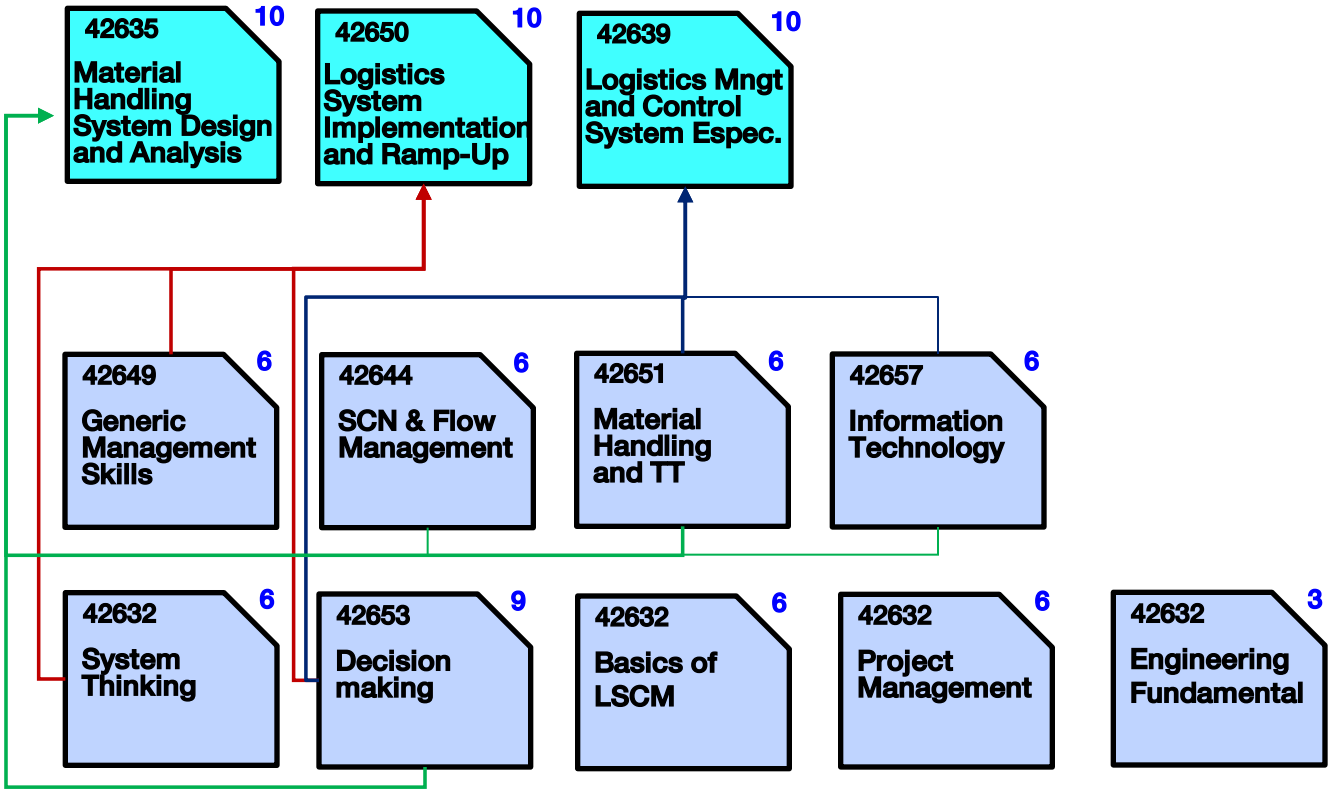

Discussion

Agreements

- ❑ Create a document based on the roadmap identified during the meeting
- ❑ Groups are created after this document is presented in its first version

Agenda

- Module presentations
  - Summary from UAB workshop
  - UAB modules
  - RTU modules (YM, JP, PP, JM, ARo)
  - UASW modules (GN, MM, MS, TM)
  - RTU modules (MU, AR)
- Teaching discussions:
  - Presentation of the competence matrix.
  - Presentation of the new LSCM Study guides website at UAB.
  - Teaching material at nebula. Cohort performance report.
  - Creation of the coordination groups for the dependent modules
  - Unification of optimization software
  - Use of The Fresh Connection game.

Discussion

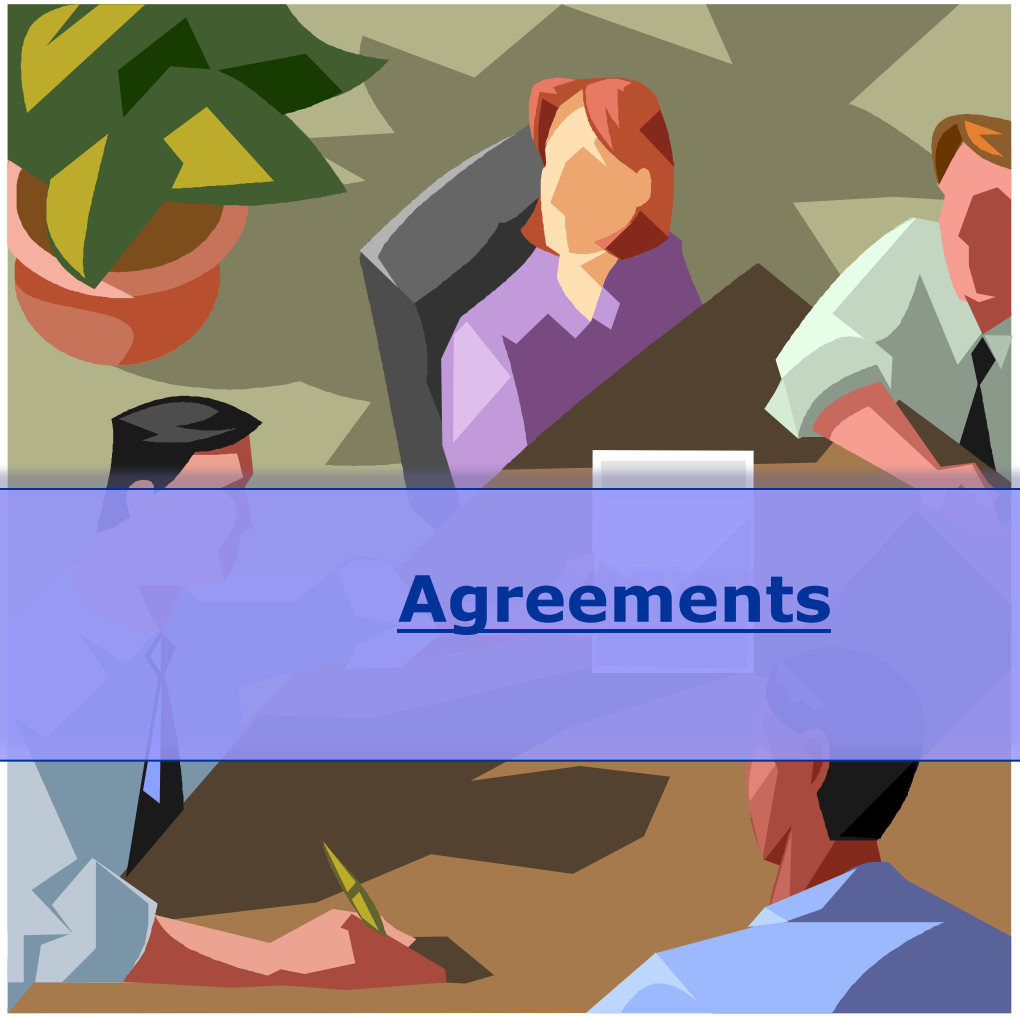

Agreements

- ...

Agenda

- Module presentations
  - Summary from UAB workshop
  - UAB modules
  - RTU modules (YM, JP, PP, JM, ARo)
  - UASW modules (GN, MM, MS, TM)
  - RTU modules (MU, AR)
- Teaching discussions:
  - Presentation of the competence matrix.
  - Presentation of the new LSCM Study guides website at UAB.
  - Teaching material at nebula. Cohort performance report.
  - Creation of the coordination groups for the dependent modules
  - Unification of optimization software
  - Use of The Fresh Connection game.

Discussion

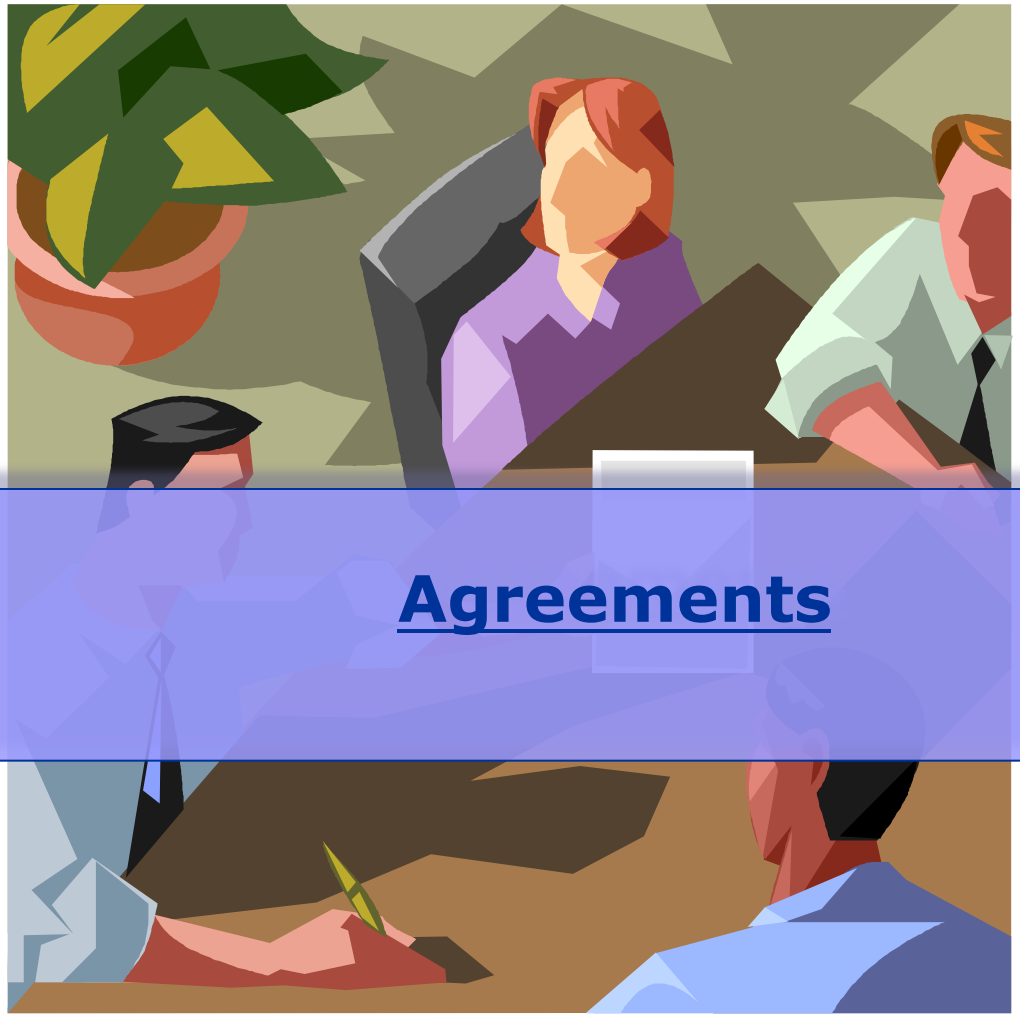

Agreements

- ...